ezFrame & Sable Frame Series

Fixed Frame Projection Screen

User's Guide

Hardware and Parts List

1. Frame Parts	x 6 pcs (4 top/bottom horizontal frame pcs + 2 side vertical frame pcs)
2. Tension Rods	x 6 pcs (4 top/bottom rods + 2 side rods)
3. Screen Material	x 1 pcs
4. Center joints	x 2 pcs
5. Elbow Joints	x 4 pcs
6. Wall brackets	x 2 – 3 pcs (depending on model/size)
7. M5x50 wood screws	x 6 pcs
8. Hollow wall anchor	x 6 pcs
9. M5x15 screws	x 16 pcs
10. Center Support Bar	x 1 – 2 pcs (depending on model/size)
11. Fix Plates	x 60 – 180 pcs (depending on model/size)

Note: Please make sure all parts are included in your package before proceeding to assemble your Elite Screens fixed frame projection screen.

FRAME ASSEMBLY

1. Insert the **center joint (4)** connector into to one of the 1/2 horizontal frames and fasten it with two **M5x15 screws (9)**.

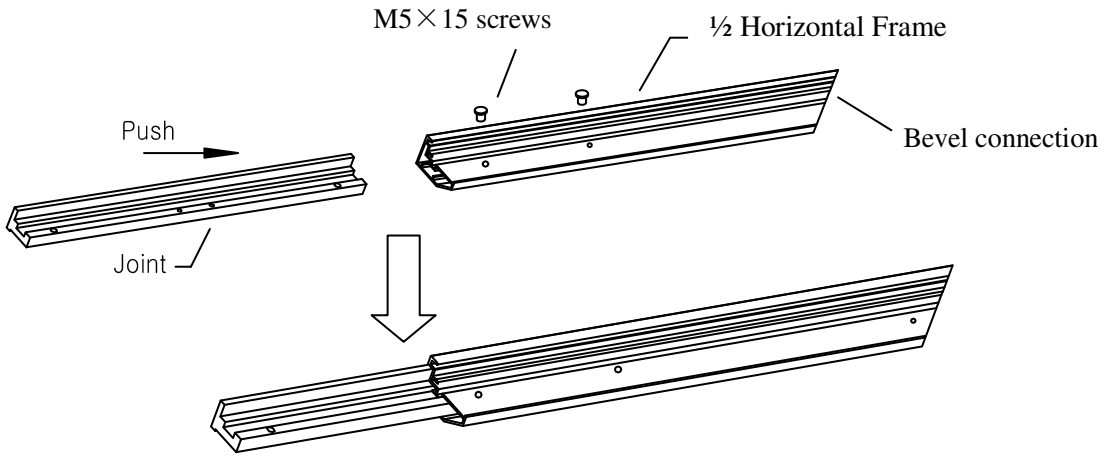

2. Insert the other 1/2 horizontal frame piece to the **center joint (4)** connector and fasten it with two **M5x15 screws (9)**. Repeat steps 1 and 2 for assembling the second horizontal frame.

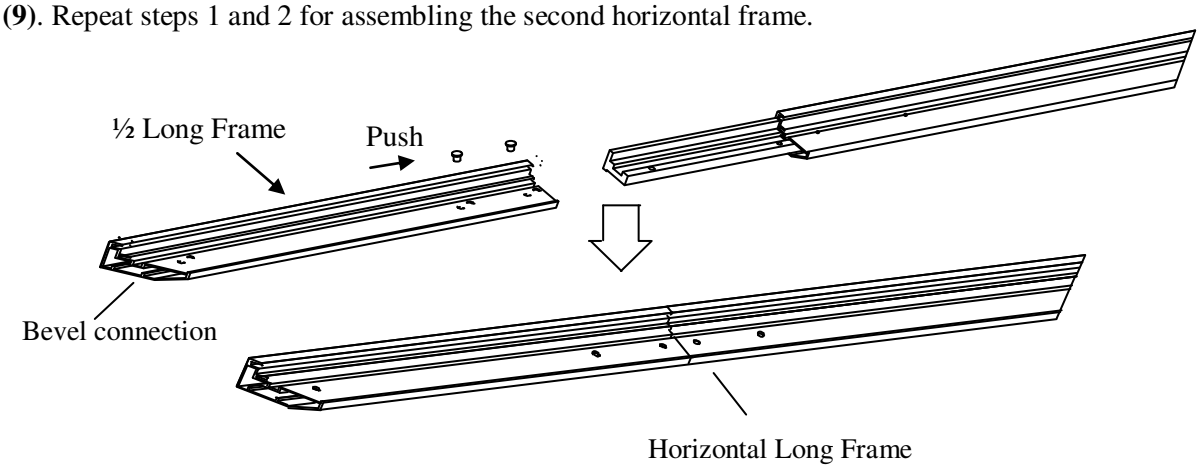

Note: a. Two ½ horizontal long frames should be assembled for a screen.

b. Do not tighten the screws completely until all frame pieces have been assembled correctly.

3. Insert both **elbow joint (5)** connectors into the long horizontal frame and then fasten it with two **M5x15 screws (9)** (Fig.1). Then insert the vertical short frames into the exposed ***elbow joint (d)*** connectors and fasten them with ***M5x15 screws (9)*** (Fig.1.2)

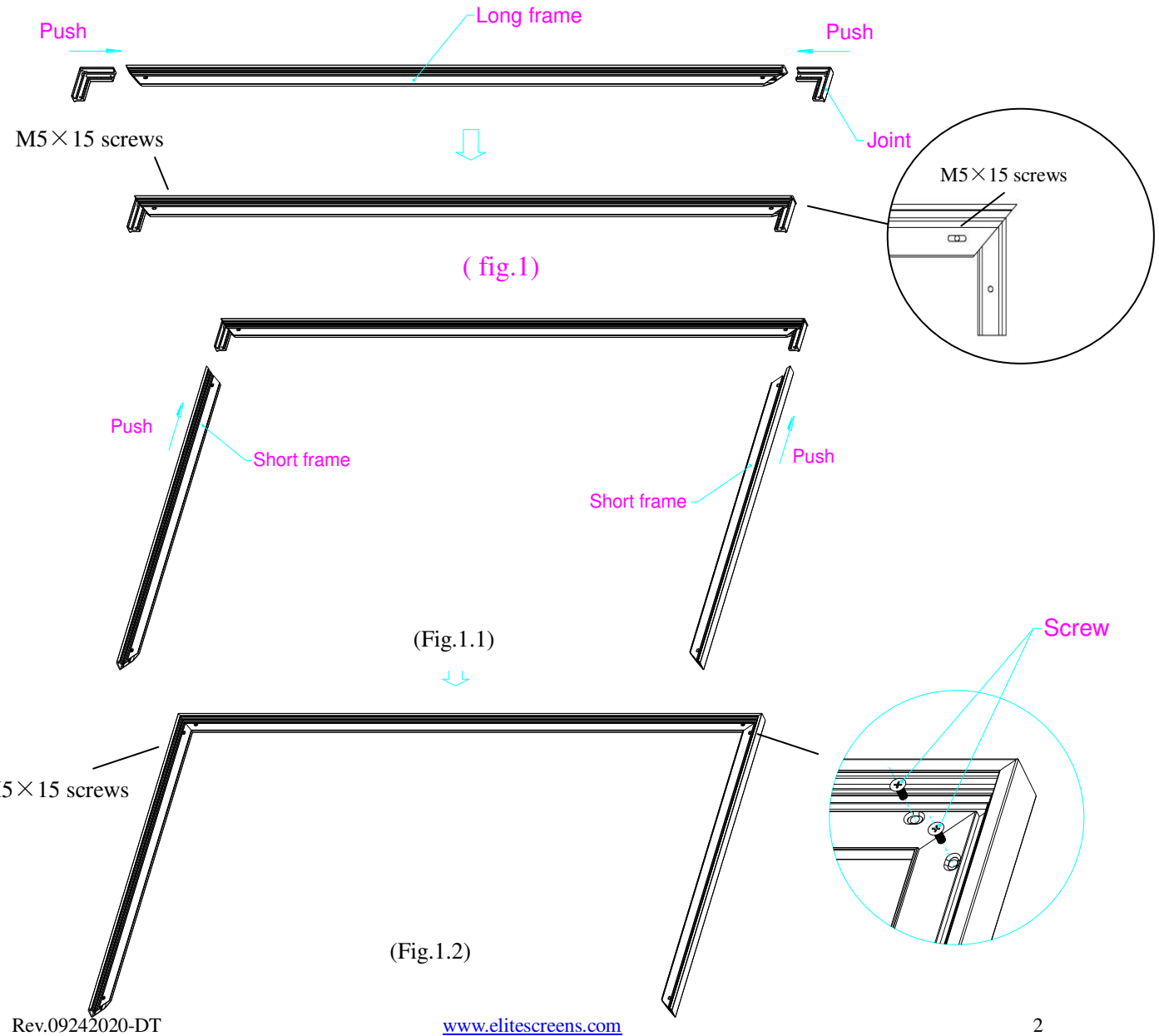

4. Join all four frame parts together following the steps shown below. (Fig.2)
Note: When assembled, please push simultaneously the two ends of the long frames.

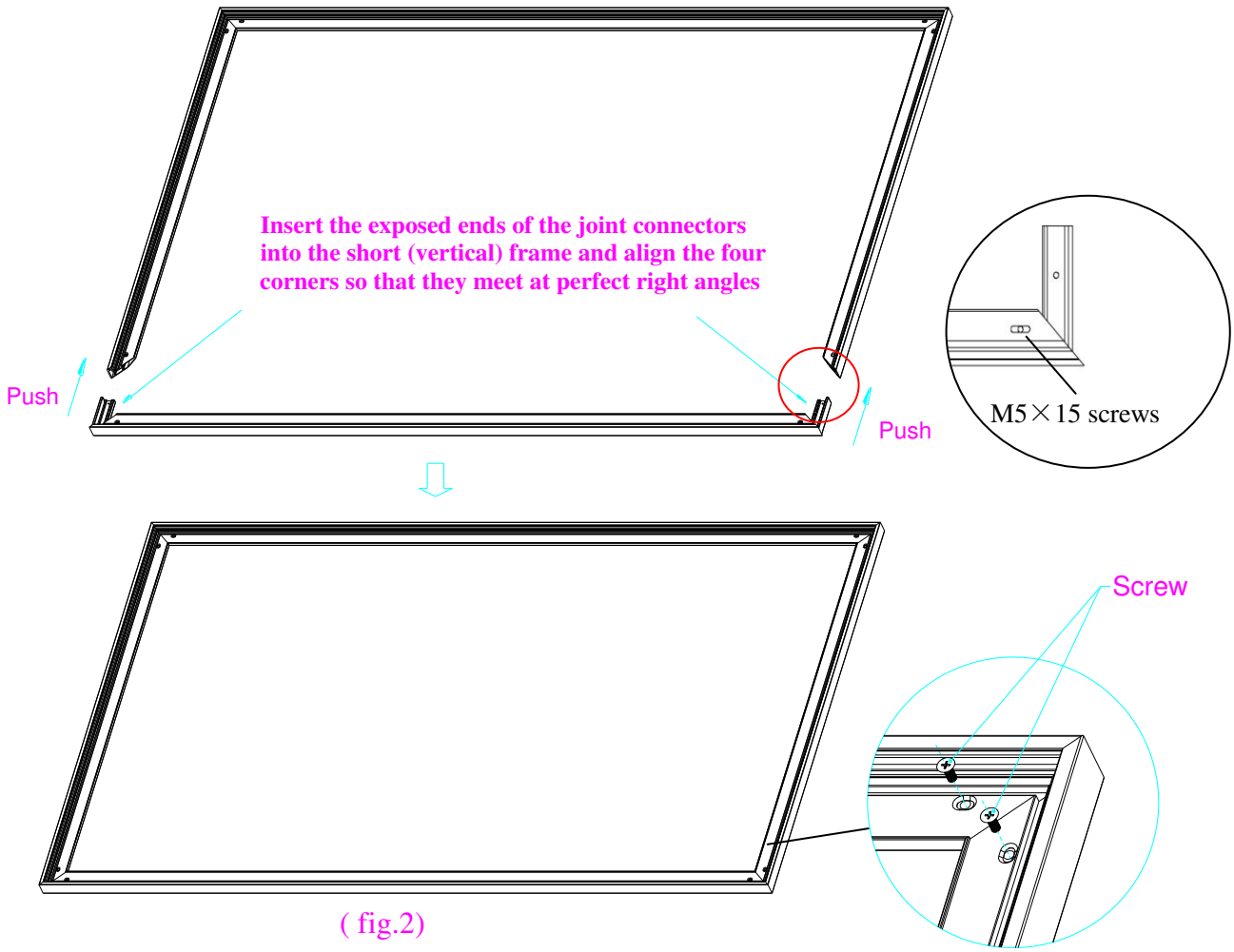

(fig.2)

Attaching the screen material to the frame

1. Unroll the screen material and lay it down on a clean surface. Then insert the tension rods separately into the edges of all four corners of the material (see Fig.3.1)

Tension Rod (Vertical) x 2

Tension Rod (Horizontal) x 4

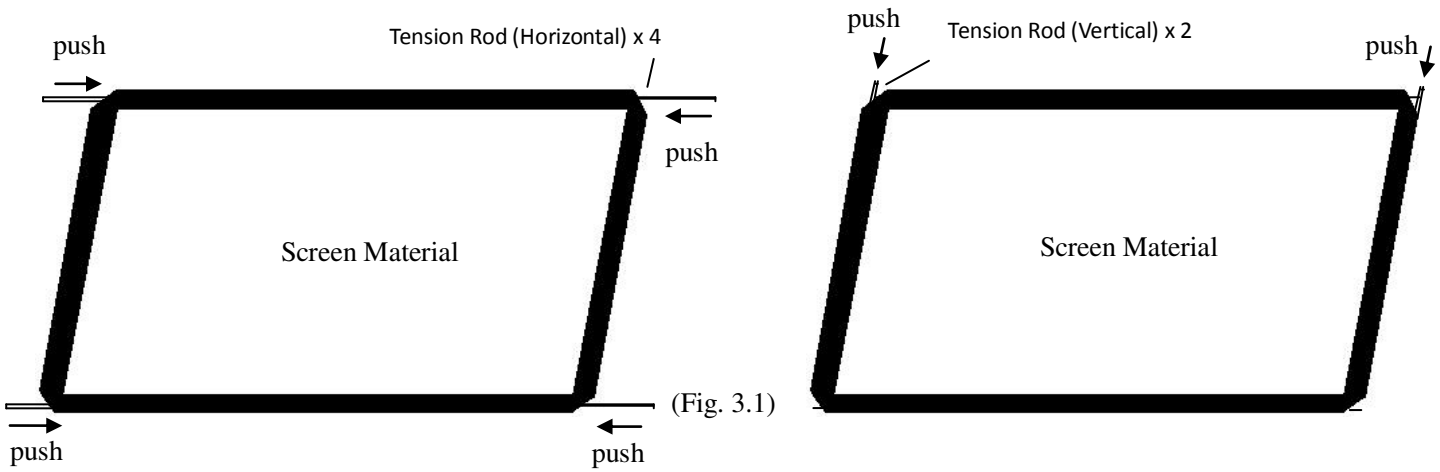

(Fig. 3.1)

2. Make sure the screen material and frame are both lying face down on a clean, dry, and non-abrasive surface.
3. Carefully unroll the material inside the frame. (Fig.3.2)

Please note the material will be noticeably smaller than the frame, as the material must be stretched to create a sufficient amount of tension for perfect material flatness.

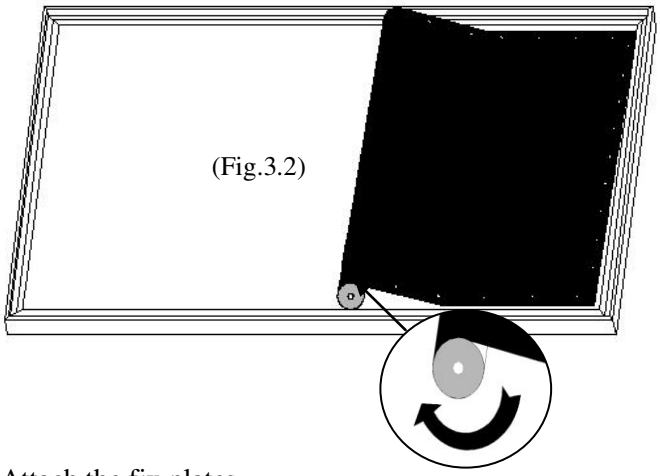

(Fig.3.2)

Notes:

- Make note of the label to help distinguish the back and front side.
- Unroll the screen material face down
- Keep the screen material as close as possible to the frame and do not allow it to scratch against any part of the frame.

4. Attach the fix plates.

(1) Stretch the material to the corner and insert the screen material's edge in the groove of the frame. While one hand holds the material in place the other hand snaps in the push plate (Fig.4-Fig.5).



(Fig. 4)

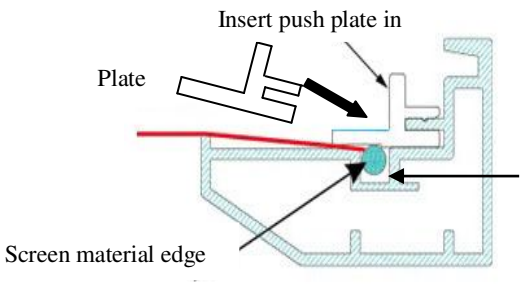

(Fig. 5)
Schematic cross section of the frame

(2) Begin by securing the four corners in the following sequence A→B→C→D (Fig.6).

(3) Insert the fix the plates as shown on Fig. 5. Fix plate ① is about 10cm away from the frame's corner. Fix plate ② is about 5cm away. (Fig.7)

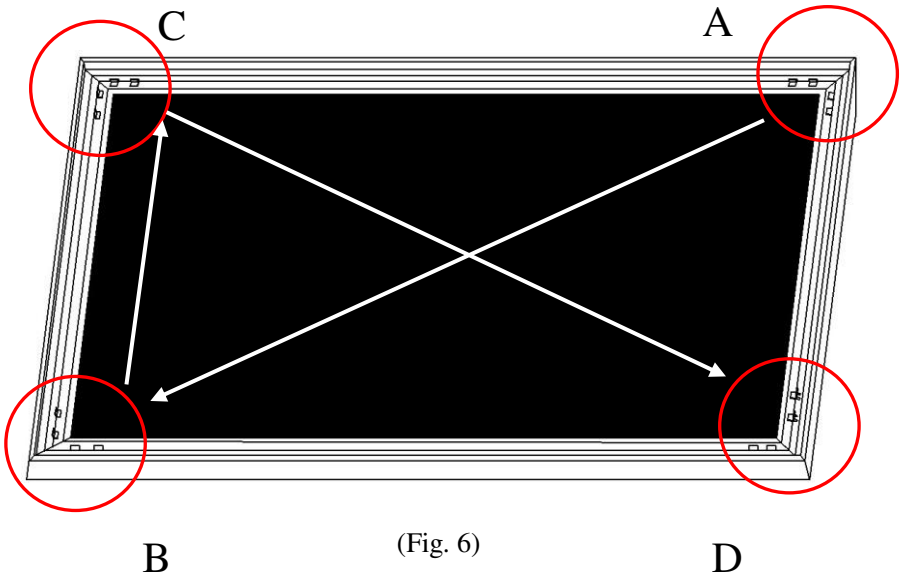

(Fig. 6)

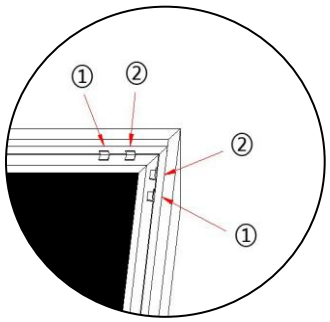

(Fig. 7)

Tip for attaching the last corner (D):

1. Position yourself left of location ①.
2. Pull the material to the corner of the frame with your hand while your left hand snaps in the fix plate on location ① (the third red dot).
3. Then insert and snap in the fix plate on location ②.
4. Next, move and position yourself on location ③, then pull the edge to the frame and fasten plates on locations ③ and ④.
5. Finally, fasten the last fix plate on location ⑤. (Fig.8)

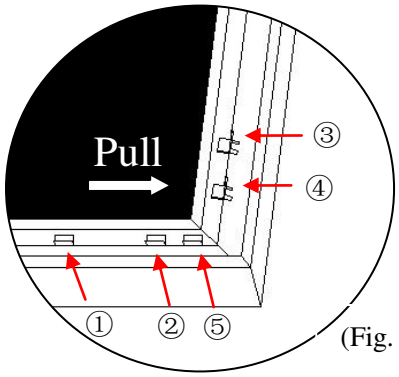

(Fig. 8)

(4) Place a fix plate in the center of each side in the following order E→F→G→H.(Fig.9)

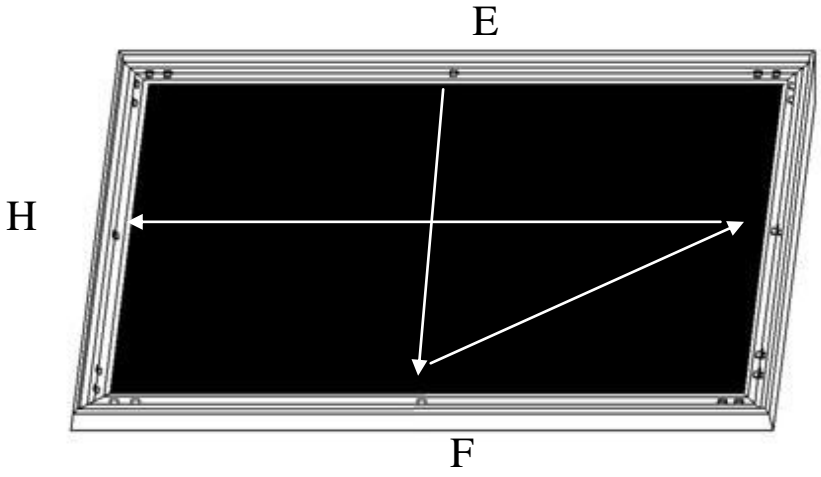

(Fig.9)

(5) Next, fasten a fix plate on the center of each frame side in the following order I→J→K→L→M→N→O→P as shown in Fig.10.

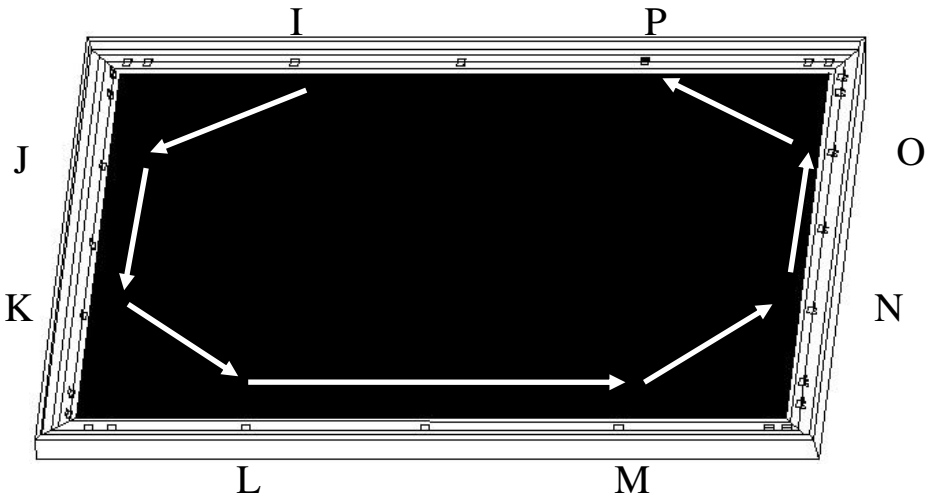

(Fig.10)

(6) Fasten the remainder of the fix plates in the empty locations in the red markings to complete attaching the screen material. (Fig.11)

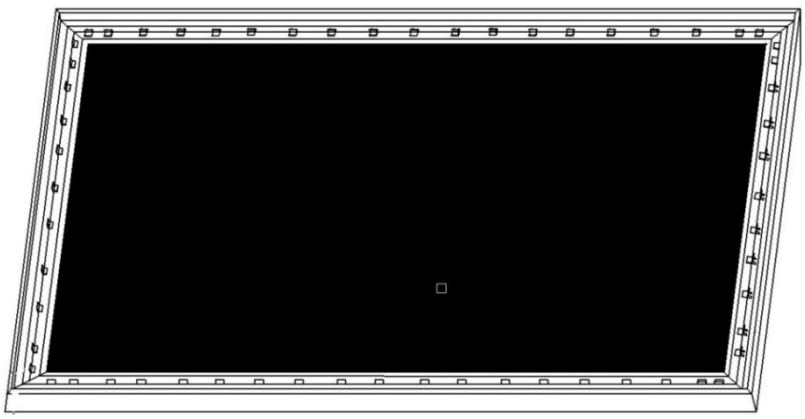
(Fig.11)

Black backing for AcousticPro models

This procedure only applies to AcousticPro models. Disregard this section if your Fixed Frame does not include an acoustically transparent screen material. The purpose of the black backing material is to block out any light penetration that may reflect off of anything mounted behind the screen, which can cause distortion to the projected image.

The black backing is held in place by the Velcro that is on the fix plates.

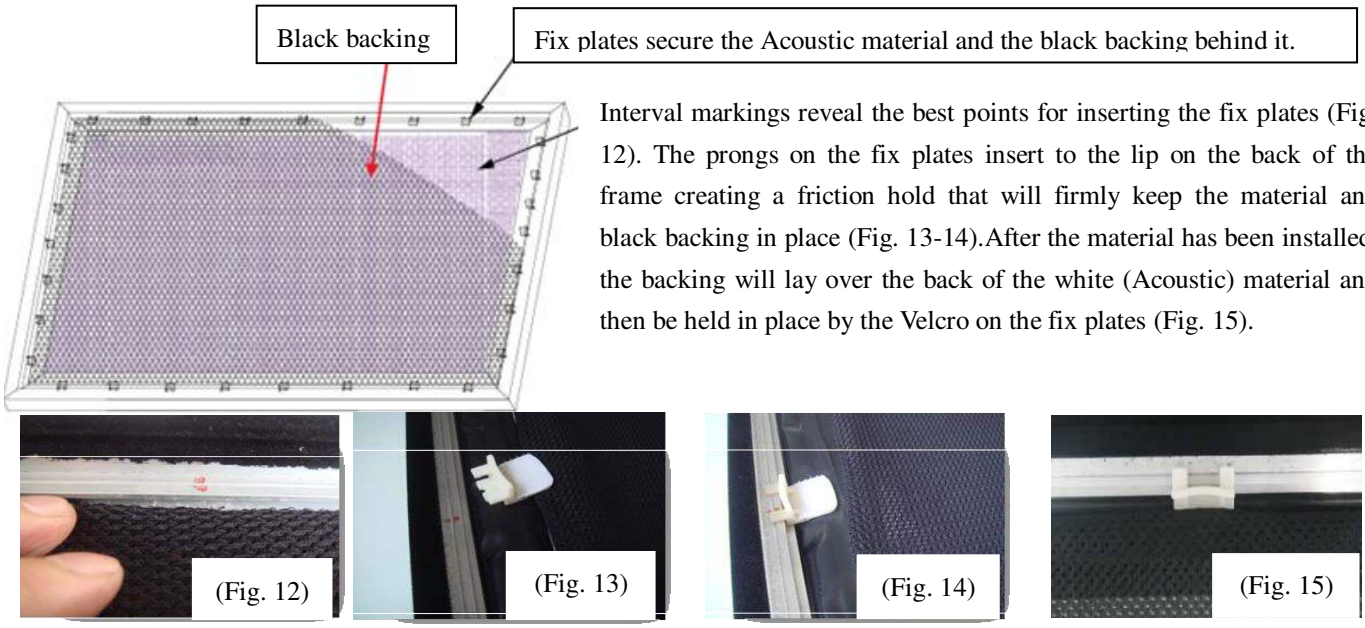

Interval markings reveal the best points for inserting the fix plates (Fig. 12). The prongs on the fix plates insert to the lip on the back of the frame creating a friction hold that will firmly keep the material and black backing in place (Fig. 13-14).After the material has been installed, the backing will lay over the back of the white (Acoustic) material and then be held in place by the Velcro on the fix plates (Fig. 15).

(Fig. 12)

(Fig. 13)

(Fig. 14)

(Fig. 15)

Center Support Bar

1. Insert the **Center Support Bar** into the upper top groove on the back of the frame **(not the one where the fix plate inserts)** with the bottom end near the approximate center point of the frame and rotate it in at an angle so that both ends of the bar are in alignment with the groove **(see Fig. 16 and Fig. 17 below for details).**

Diagonal models 150" (include 150") and below use 1 x Center Support Bar

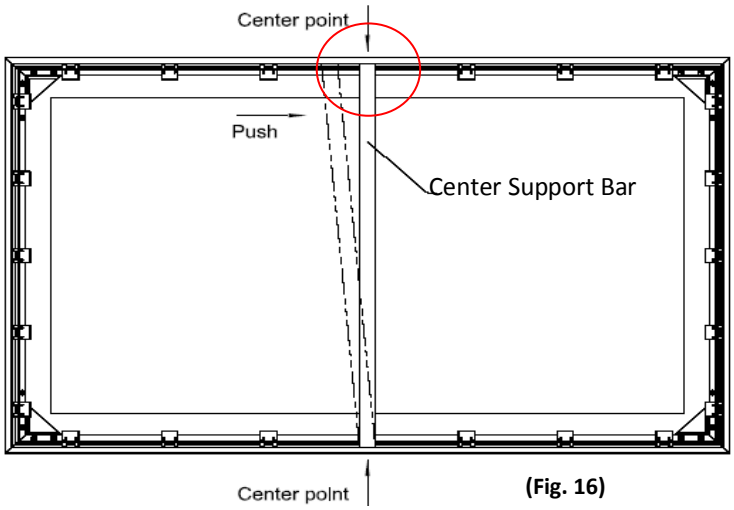

(Fig. 16)

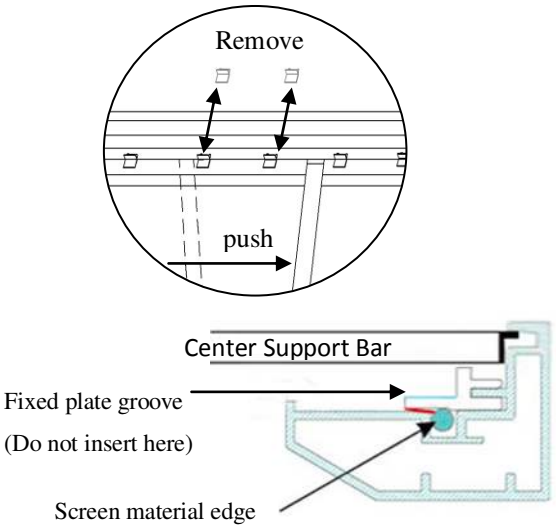

Diagonal models above 150" (not including 150") require 2 x Center Support Bars

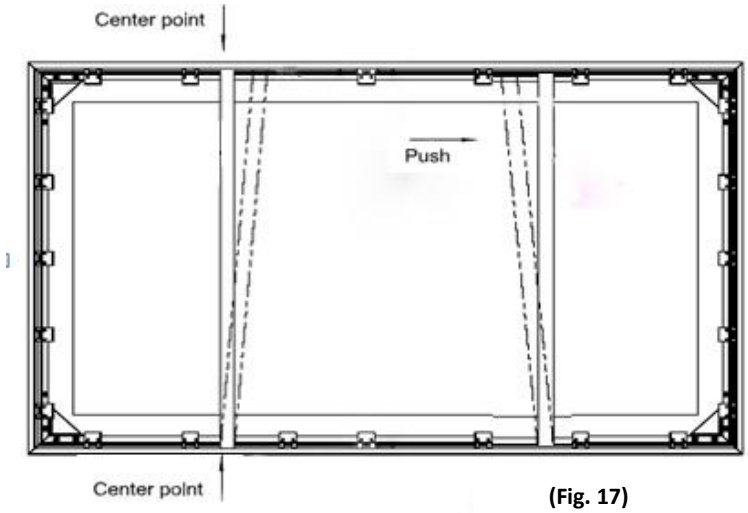

(Fig. 17)

2. Slide the top end of the bar into the top center point of the frame to complete the center support bar installation. **This will provide added stability to your frame and added tension to the material.**

Installation

1. Locate your desired installation location with a stud finder (recommended) and mark the drill-hole area of where the screen is to be installed.

2. Drill a hole with the proper bit size according to the wood screws included.

3. Line up the wall brackets with the drilled holes on the installation location and screw them in using a Phillips screw driver. **Note: Use 2 top wall brackets on diagonal sizes below 150", and use 3 top wall brackets on diagonal sizes 150" and above.**

4. Position the fixed frame screen onto the top wall brackets as shown in **(Fig. 18)** and push down at the center of the bottom frame to secure the installation.

5. The design of the wall brackets allows the frame to slide over them through its sides. This is an important feature of the installation design as it allows your screen to be properly centered.

6. Using both hands finish the installation by pushing the lower portion of the fixed frame screen into the lower bracket as shown in Fig 19.

(Fig. 18)

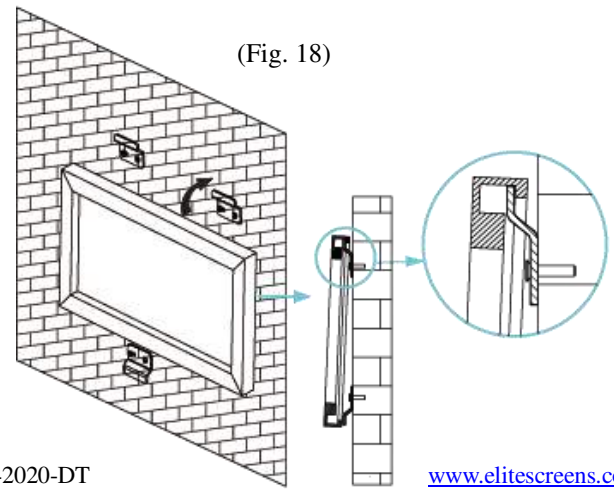

(Fig.19)

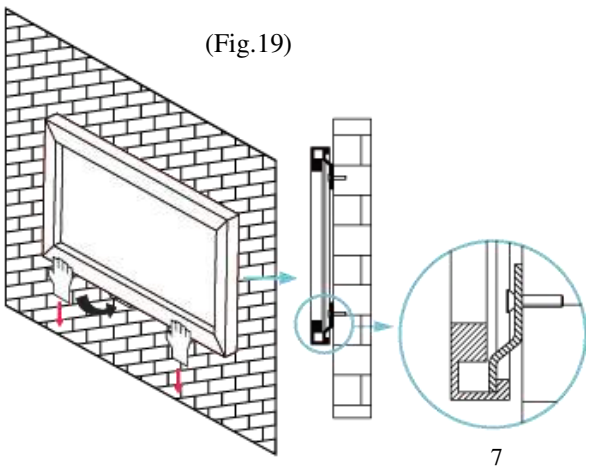

CAUTION

Please follow these instructions carefully to ensure proper maintenance and safety of your Fixed Frame Screen.

1. When hanging the screen up, please make sure that no other objects such as power switches, outlets, furniture, ladders, windows, etc. occupy the space designated for your Fixed-Frame screen.

2. Regardless if the screen is hung on or installed into the wall, make sure that the proper mounting anchors are used and that the weight is supported appropriately by a strong and structurally sound surface just as any large and heavy picture frame should.
(Please consult a home improvement specialist for the best advice on installation)

3. Frame parts are made of high quality velour-surfaced aluminum and should be handled with care.

4. When not in use, cover over the screen with a furniture sheet to protect it from dirt, grime, paint or any other impurities.

5. When cleaning, use a damp soft cloth with warm water to remove any marks on the frame or screen surface.

6. Never attempt to use any solutions, chemicals or abrasive cleaners on the screen surface.

7. In order to avoid damaging the screen, avoid touching it directly with your fingers, tools or any other sharp or abrasive objects.

8. Spare Parts should be placed out of reach of small children in accordance with household safety guidelines.

For a local Elite Screens contact or Technical Support, please visit

www.elitescreens.com